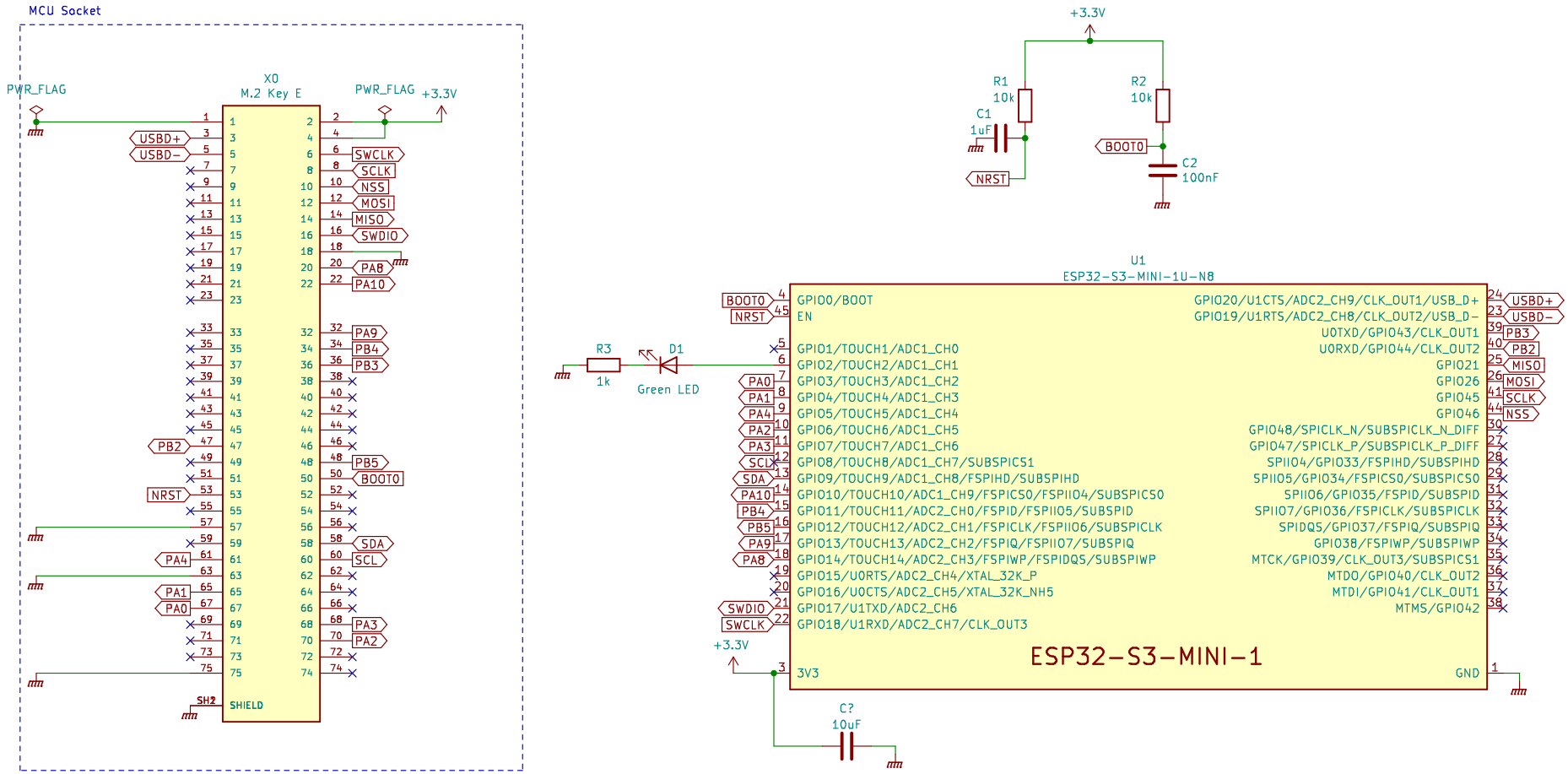
MCU Socket
X0
M.2 Key E
PWR_FLAG
PWR_FLAG
+3.3V
USBD+
USBD−
SWCLK
SCLK
NSS
MOSI
MISO
SWDIO
PA8
PA10
PA9
PB4
PB3
PB2
PB5
BOOT0
NRST
SDA
SCL
PA4
PA1
PA0
PA3
PA2
SHIELD
+3.3V
R1
10k
R2
10k
C1
1uF
BOOT0
C2
100nF
NRST
U1
ESP32-S3-MINI-1U-N8
BOOT0
NRST
R3
1k
D1
Green LED
GPIO0/BOOT
EN
GPIO1/TOUCH1/ADC1_CH0
GPIO2/TOUCH2/ADC1_CH1
GPIO3/TOUCH3/ADC1_CH2
GPIO4/TOUCH4/ADC1_CH3
GPIO5/TOUCH5/ADC1_CH4
GPIO6/TOUCH6/ADC1_CH5
GPIO7/TOUCH7/ADC1_CH6
GPIO8/TOUCH8/ADC1_CH7/SUBSPICS1
GPIO9/TOUCH9/ADC1_CH8/FSPIHD/SUBSPIHD
GPIO10/TOUCH10/ADC1_CH9/FSPICS0/FSPII04/SUBSPICS0
GPIO11/TOUCH11/ADC2_CH0/FSPID/FSPII05/SUBSPID
GPIO12/TOUCH12/ADC2_CH1/FSPICLK/FSPII06/SUBSPICLK
GPIO13/TOUCH13/ADC2_CH2/FSPIQ/FSPII07/SUBSPIQ
GPIO14/TOUCH14/ADC2_CH3/FSPIWP/FSPIDQS/SUBSPIWP
GPIO15/U0RTS/ADC2_CH4/XTAL_32K_P
GPIO16/U0CTS/ADC2_CH5/XTAL_32K_NH5
GPIO17/U1TXD/ADC2_CH6
GPIO18/U1RXD/ADC2_CH7/CLK_OUT3
PA0
PA1
PA4
PA2
PA3
SCL
SDA
PA10
PB4
PB5
PA9
PA8
SWDIO
SWCLK
GPIO20/U1CTS/ADC2_CH9/CLK_OUT1/USB_D+
GPIO19/U1RTS/ADC2_CH8/CLK_OUT2/USB_D−
U0TXD/GPIO43/CLK_OUT1
U0RXD/GPIO44/CLK_OUT2
GPIO21
GPIO26
GPIO45
GPIO46
GPIO48/SPICLK_N/SUBSPICLK_N_DIFF
GPIO47/SPICLK_P/SUBSPICLK_P_DIFF
SPII04/GPIO33/FSPIHD/SUBSPIHD
SPII05/GPIO34/FSPICS0/SUBSPICS0
SPII06/GPIO35/FSPID/SUBSPID
SPII07/GPIO36/FSPICLK/SUBSPICLK
SPIDQS/GPIO37/FSPIQ/SUBSPIQ
GPIO38/FSPIWP/SUBSPIWP
MTCK/GPIO39/CLK_OUT3/SUBSPICS1
MTDO/GPIO40/CLK_OUT2
MTDI/GPIO41/CLK_OUT1
MTMS/GPIO42
USBD+
USBD−
PB3
PB2
MISO
MOSI
SCLK
NSS
ESP32-S3-MINI-1
3V3
GND
+3.3V
C?
10uF