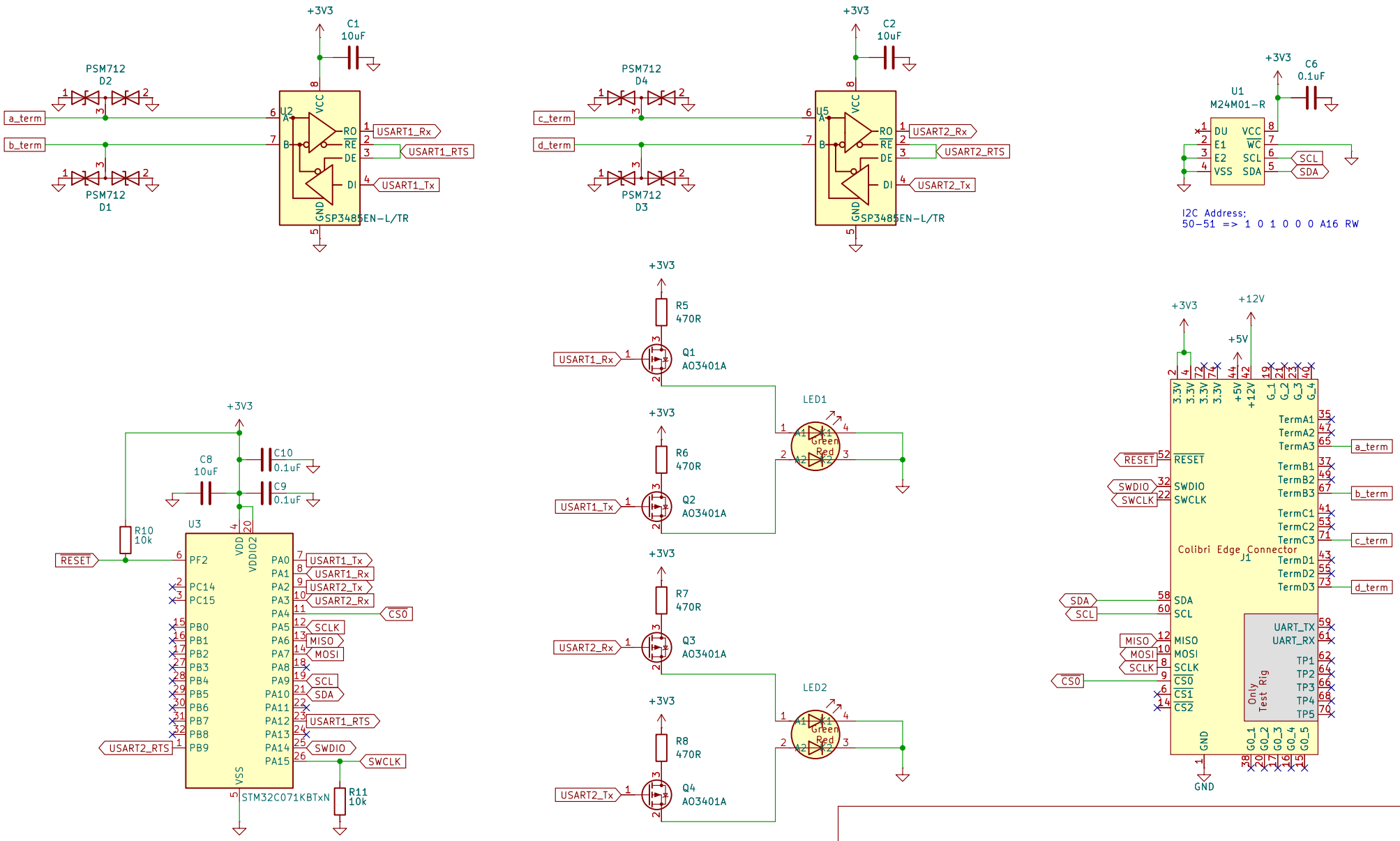

CurrentMakers

Sheet: /

File: colibri_rs485u.kicad_sch

Title: Colibri RS485u

Size: A4	Date:	Rev: B
KiCad E.D.A. 10.0.3		Id: 1/1